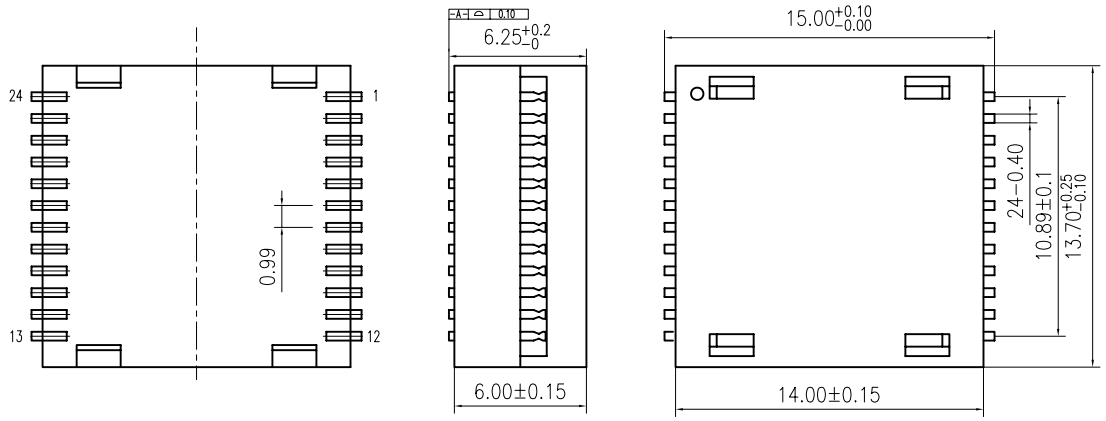

ELECTRICAL SPECIFICATIONS @ 25°C unless otherwise noted:

PARAMETER		TEST CONDITIONS	VALUE
INDUCTANCE	23-22	100kHz, 100mVAC, Lp	200uH min.
INDUCTANCE	20-19	100kHz, 100mVAC, Lp	200uH min.
INDUCTANCE	17-16	100kHz, 100mVAC, Lp	200uH min.
INDUCTANCE	14-13	100kHz, 100mVAC, Lp	200uH min.
DIELECTRIC input~output		-	1500Vrms, 1 minute
TURNS RATIO		-	1CT:1CT, ±2%
DCR		-	1.2OHMS MAX
INSERTION LOSS		100kHz - 10MHz	-1.0dB max.
		100kHz - 650MHz	-3.0dB max.
RETURN LOSS (LOAD X+ TO X-)		1M - 40MHz	-18dB min.
		40M - 400MHz	-8dB min.
		400M - 500MHz	-5dB min.
RETURN LOSS (LOAD D+ TO D-)		1M - 40MHz	-18dB min.
		40M - 500MHz	-9dB min.
CROSSTALK		1M - 500MHz	-30dB min.
CMDR	D+ to D-	1M - 500MHz	-25dB min.
CMDR	X+ to X-	1M - 500MHz	-25dB min.

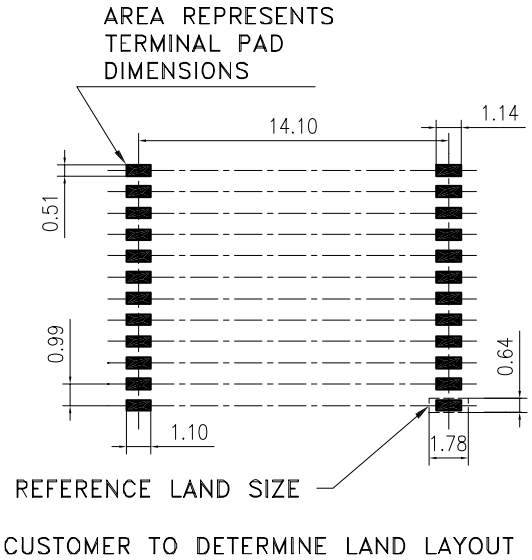

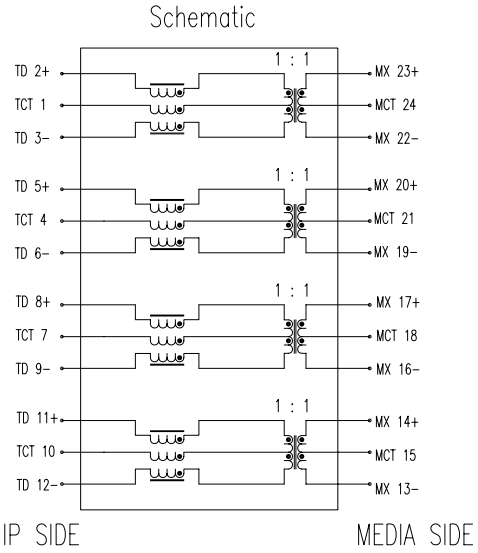

GENERAL SPECIFICATIONS:

OPERATING TEMPERATURE RANGE: 0°C to +70°C.

COPLANARITY: All 24 terminals must lie on a plane within .004 [.10] of Surface A after lead tinning.

Comply with RoHS B-TOP

B-TOP ® 东莞市博腾电子科技有限公司 Dongguan BroadTop Electronic Technology Co., Ltd.	Designed		MATERIAL		DESCRIPTION	B-TOP 10G 变压器模组结构图纸V1.0	
	Checked						
FIRST ANGLE PROJECTION	TEL: 0769-38926198 FAX: 0769-38926199	Website www.BtopTech.cn www.BtopTech.com	Approved	SCALE 3:1	UNIT mm	MODEL NO.	REV. V_1.0