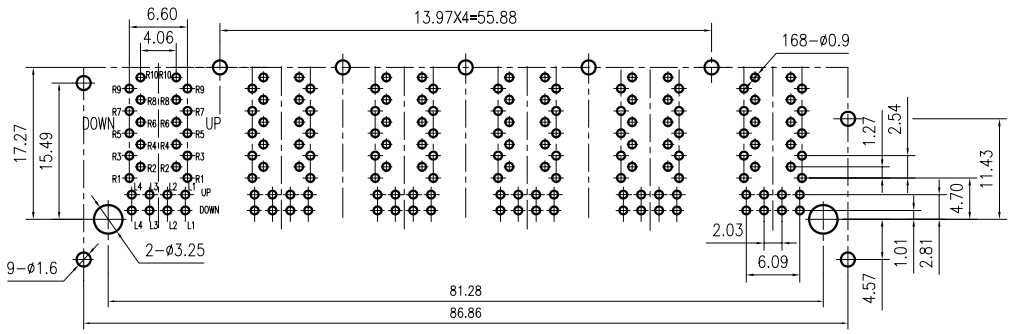

PCB BOARD LAYOUT

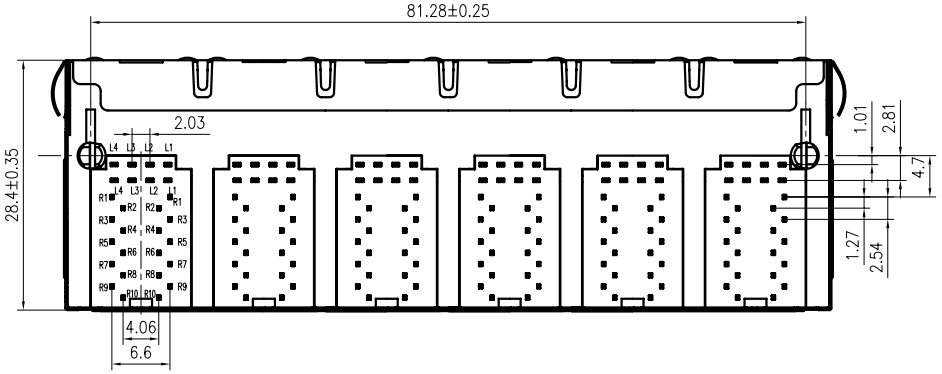

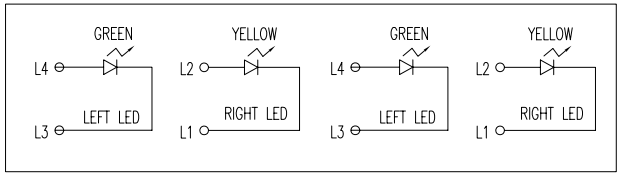

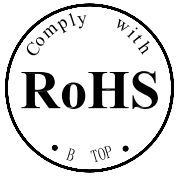

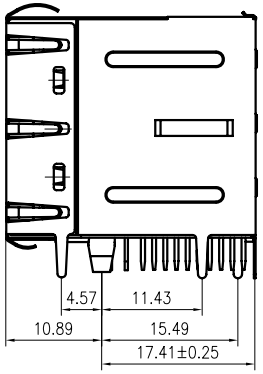

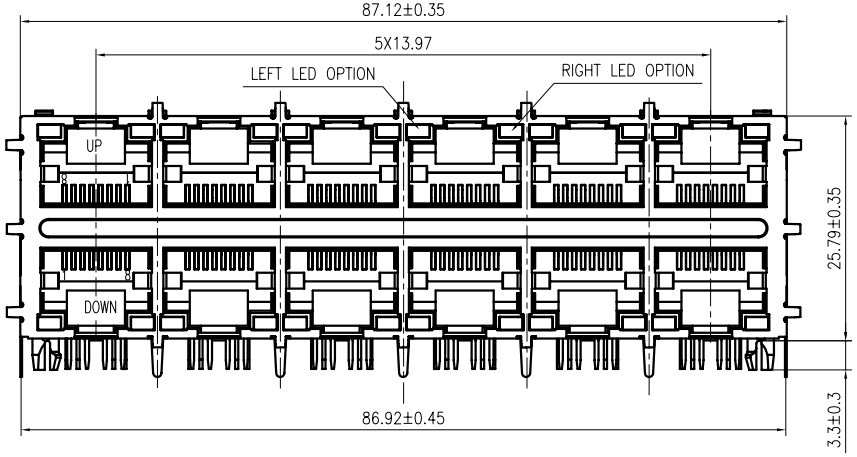

LED Specification

Standard LED Color	LED Wavelength	Forward (V MAX)	Typical (V TYP)	Luminous Intensity
Green	560-580 nm	2.5V	2.1-2.2V	9-25 MCD
Yellow	580-610 nm	2.5V	2.1-2.2V	9-30 MCD
Orange	580-610 nm	2.5V	2.1-2.2V	50-100 MCD

1. LED intensity/wavelength measured with Photo Research PR-650 Colormeter
2. With a forward current of 20 mA,Absolute Maximum Ratings (Ta=25℃)

1:TOLERANCES UNLESS OTHERWISE SPECIFIED :
0~10±0.15、10~20±0.2、20~40±0.25、
40~70±0.3、≥70±0.4
2:JACK CAVITY CONFORMS TO FCC RULES AND REGULATIONS,PART 68 SUBPART F.

B-TOP® 东莞市博腾电子科技有限公司 Dongguan BroadTop Electronic Technology Co., Ltd.	Designed		MATERIAL			DESCRIPTION	B59(173-15)G8-09-6223-C12(2X6 G-Y LED EMI)
	Checked						
FIRST ANGLE PROJECTION	CUSTOMER		SCALE	1.2:1	UNIT mm	MODEL NO.	REV. V1.0
	MODEL NO.		Approved				

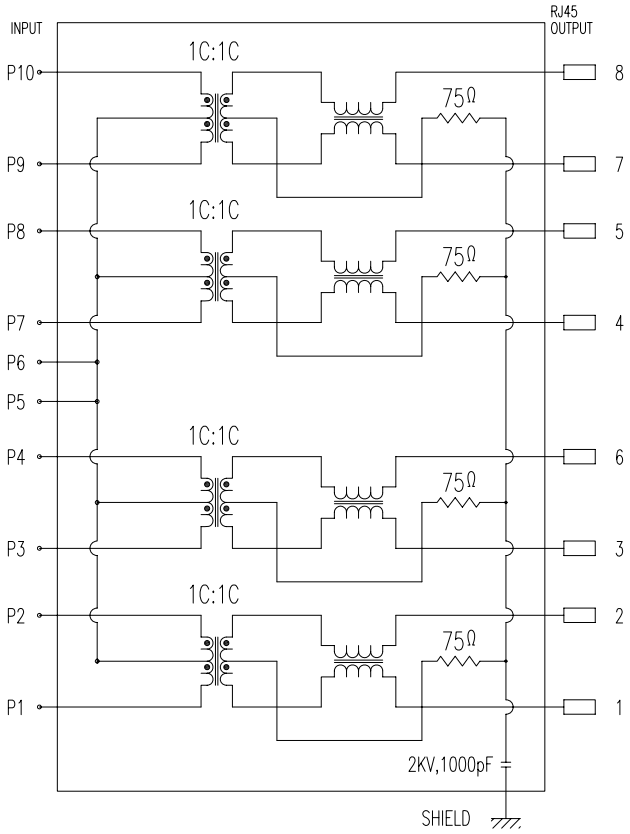

DESCRIPTION

ELECTRICAL:

RJ45 With internal Magnetics Connector
Designde to support such applications as:Ethernet Equipment Complex,Switches,Routers,Firewalls,Servers and Hub
Internal magnetics are 100% electrically tested for functionality per IEEE802.3 requirement
RoHS peak wave solder temperature rating 235℃
High performance for maximum EMI suppression
350uH minmum OCL with 8mA bias current
PoE rating:15W,350mA,48V (For PoE Products only)

MECHANICAL:

JACK CAVITY CONFORMS TO FCC RULES AND REGULATIONS,PART 68 SUBPART F.
INSERTION FORCE: 2 CONTACTS----350g 4 CONTACTS----500g
6 CONTACTS----750g 8 CONTACTS----900g
10 CONTACTS----1050g
RETENTION STRENGTH: 7.7Kgs BETWEEN JACK AND PLUG
DURABILITY: 750 MATING CYCLES Mini

Comply with RoHS • B TOP •

MATERIAL:

HOUSING: 1) GLASS FILLED PA66 (UL 94V-0)
2) GLASS FILLED PA46/LCP (UL 94V-0)
3) GLASS FILLED PBT (UL 94V-0)
SPRING WIRE: 1) 0.2-0.45mm DIA PHOSPHOR BRONZE GOLD PLATING OVER NICKEL
2) 0.2-0.35mm THICKNESS PHOSPHOR BRONZE ALLOY SELECTIVE GOLD PLATING OVER NICKEL
SHIELDING: 0.12-0.24mm THICKNESS COPPER ALLOY WITH TIN PLATED
GOLD PLATING: 3μ", 6μ", 15μ", 30μ", 50μ"
WORKING TEMPERATURE: -20℃∽70℃
TOLERANCES UNLESS OTHERWISE SPECIFIED : 0~10±0.15、10~20±0.2、20~40±0.25、40~70±0.3、≥70±0.4

B N (Z) G X- M - A B C D - E H I

"B" with the company code

Series of products: 60:Double deck RJ45 connector + transformer series(In sidelong footprint); 59:Double deck RJ45 connector + transformer series(In vertical footprint);50: Single RJ45 + transformer series;52/53/55/56 LED/56/57/59: Ordinary RJ45 series;DX: that strip line series; 40: Conversion said Connectivity 80: Series that UK; 91: Automotive connector public Block;92: Automotive connector mother Block; 93: HDMI the head;94: HDMI mother Block; 95: SMT series; 96: RMS for switches

Family code (sequence id) :1-99

Type of product code: G: Gigabit RJ45 transformer; F: 100Base RJ45 transformer; W:for no transformer RJ45 products; M: Series for board-to-board code

Number of magnetic ring

The No. of circuit

Product definition LOGO: 1 - Press LOGO ;2- No LOGO ; 3- Other companies LOGO

Product definition plastic materials: 1-PA66,2-PA46, 3-PA, 4-PA6, 5-PBT, 6-ABS, 7-PA9T,8-PC

Pin definition of the product:F-Pin after; B-Pin back; C- No definition of the product

Electroplating product definition: gold-plated terminals(degrees after nickel plated) 1-F μ" ; 2-3μ" ;3-6μ" ; 4-15μ" ; 5-30μ" ; 6-50μ" ;7-(Ni-50μ" ,Sn-80-120μ");

Product shielding definition: 0 - no shielding shell; 1 - without shielding shell shrapnel; 2 - shielding a shell shrapnel; 3 - a half-shield shell; 4— TF5-shield shell

Products luminous definition: 0 - No LED; 1 -Left Yellow Right Green; 2 - Left Green Right Yellow; 3 - Double Green; 4 - Double Yellow; 5 - LED straight for the pin; 6 - A special definition;7 - Single linear LEDs

Products out port" 1-2X1" 2-2X2" 4-2X4" 5-2X5" 6-2X6" 8-2x8" A-1X1" B-1X2" C-1X4" D-1X5 "E-1X6" T-1X8" U-(USB+RJ45)" P-TAB UP1X1" H-TAB UP1X2" K-TAB UP1X4"

ELECTRICAL SPECIFICATIONS AT 25°C

Insertion Loss dB max	Return Loss dB min			Crosstalk(db TYP)			Common Mode Rejection (dB TYP)		Hipot(vrms)
1-100MHz	1-30MHz	30- 60MHz	60- 100MHz	1-30MHz	30- 60MHz	60- 100MHz	1-50MHz	50-150MHz	
-1.0	-18	-16	-12	-40	-35	-30	-30	-20	1500/0.5mA

B-TOP® 东莞市博腾电子科技有限公司 Dongguan BroadTop Electronic Technology Co., Ltd.	Designed		MATERIAL			DESCRIPTION	BT G8-09
	Checked						
FIRST ANGLE PROJECTION	CUSTOMER		SCALE	1.8:1	UNIT mm	MODEL NO.	B8002000091 1
	MODEL NO.		Approved				REV.